6440 QUICK START GUIDE

Version 1.0

TESCO METERING

SCAN TO VIEW
Specs and Manual

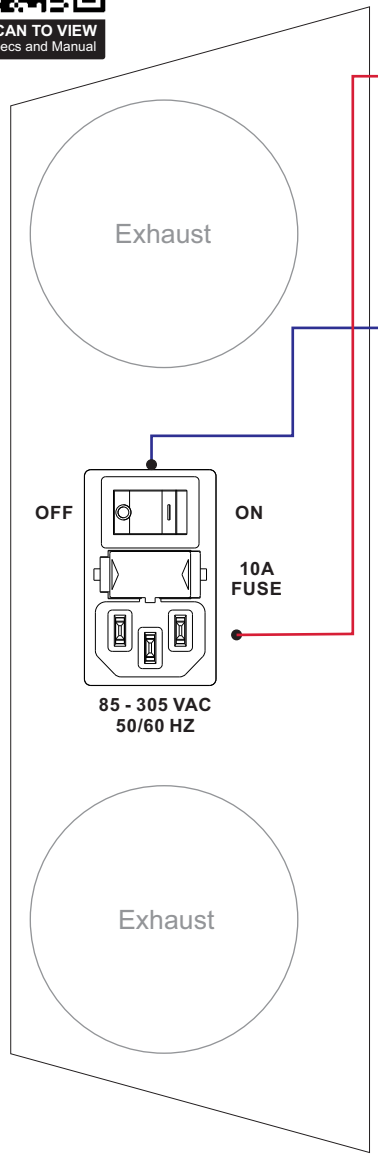

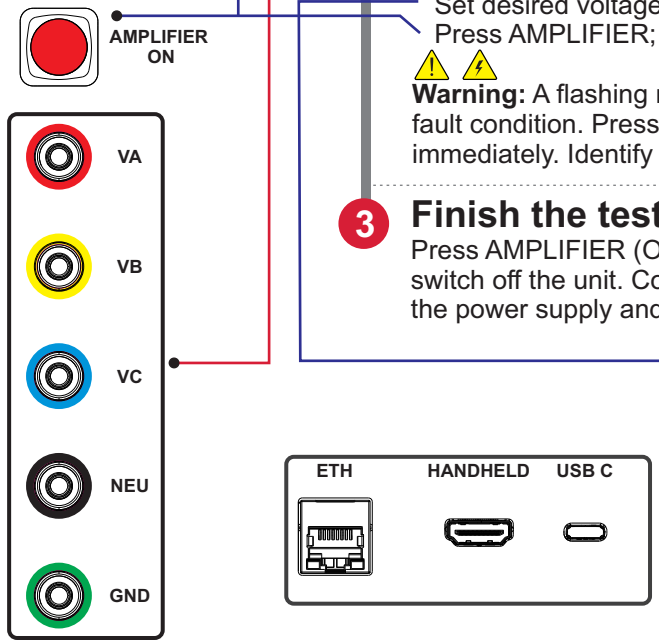

1 Wiring

- Plug in one of the two power cords. The unit can be powered with a standard 120V plug or at the site voltage of 85-305 VAC range.
- Connect voltage leads to VA, VB, VC, and Neutral output terminals. Connect the opposite ends of the leads to the device under test (DUT).

2 Testing

- Press POWER; confirm green LED ON.
  Allow ~20 s for startup and audible beep.
  Set desired voltage via rotary selector.
  Press AMPLIFIER; verify red LED is steady ON (output enabled).

Warning: A flashing red indicator with an audible alarm indicates a fault condition. Press AMPLIFIER (OFF) to de-energize output immediately. Identify and correct the fault before re-energizing.

3 Finish the test

Press AMPLIFIER (OFF) to disable output. Press POWER to switch off the unit. Confirm all outputs are de-energized. Disconnect the power supply and all test leads from the DUT.

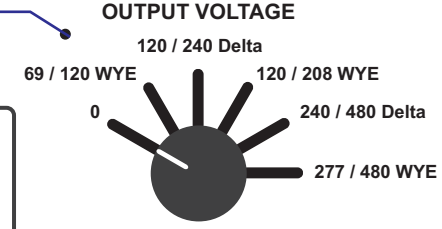

www.tescometering.com